Summary in Graph

# Exam Summary (GO Classes CS Test Series 2026 | Computer Networks | Topic Wise Test 1)

| | | | |
|---|---|---|---|
| Qs. Attempted: | 0 (0 + 0) | Correct Marks: | 0 (0 + 0) |
| Correct Attempts: | 0 (0 + 0) | Penalty Marks: | 0 (0 + 0) |
| Incorrect Attempts: | 0 (0 + 0) | Resultant Marks: | 0 (0 + 0) |

| | |
|---|---|
| Total Questions: | 15 (5 + 10) |
| Total Marks: | 25 (5 + 20) |
| Exam Duration: | 45 Minutes |
| Time Taken: | 0 Minutes |

## Individual Question Statistics

Select Metric: Marks Obtained

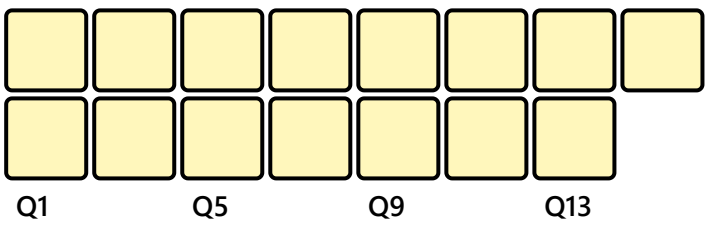


* Average Stats based on first-attempt stats of Top 10% (157) out of 1574 users

EXAM RESPONSE EXAM STATS FEEDBACK

# Technical

Q #1 Multiple Choice Type Award: 1 Penalty: 0.33 Computer Networks

Consider a $1\ \mathrm{Mbps}$ satellite channel with $50\ \mathrm{ms}$ round trip propagation delay. We want to send a $1000$ bit frame, and we will not send a second frame until we receive acknowledgment for the first frame.

What fraction of the available bandwidth are we using?

A. $1/40$
B. $1/51$

C. $1/2$
D. $1/5$

Your Answer: | Correct Answer: B | Not Attempted | Time taken: 00min 01sec | Discuss

Q #2 | Multiple Select Type | Award: 1 | Penalty: 0 | Computer Networks

An error-control code with minimum Hamming distance of $11$ is capable of

A. detecting $11$ bits of error.
B. detecting $5$ bits of error.
C. correcting $5$ bits of error.
D. correcting $11$ bits of error.

Your Answer: | Correct Answer: B;C | Not Attempted | Time taken: 00min 00sec | Discuss

Q #3 | Multiple Select Type | Award: 1 | Penalty: 0 | Computer Networks

Let $\mathrm{CRC}$ generator polynomial $\mathrm{G}(x) = 1 + x$.

Which of the following errors $\mathrm{E}(x)$ will be detected by $\mathrm{G}(x)$?

A. $\mathrm{E}(x) = x^{12} + x^{11} + x^3 + x^2 + x + 1$
B. $\mathrm{E}(x) = x^{36} + x^5 + 1$
C. $\mathrm{E}(x) = x^{17} + x^5$
D. $\mathrm{E}(x) = x^{11} + x^2 + 1$

Your Answer: | Correct Answer: B;D | Not Attempted | Time taken: 00min 00sec | Discuss

Q #4 | Multiple Choice Type | Award: 1 | Penalty: 0.33 | Computer Networks

Slotted aloha is a variant of the Aloha media-access protocol that divides time into equal-sized "$\mathrm{slots}$" and only starts transmissions at the beginning of a slot time. In a slotted aloha system, suppose there are $5$ nodes that each transmit with probability of $p$. What is the probability, in a given slot time, that one of the nodes successfully transmits a packet?

A. $5p(1-p)^4$
B. $p(1-p)^4$
C. $(1-p)^5$
D. $p^5$

Your Answer: | Correct Answer: A | Not Attempted | Time taken: 00min 00sec | Discuss

Q #5 | Multiple Select Type | Award: 1 | Penalty: 0 | Computer Networks

Consider the network of learning bridges shown in the following figure. Learning bridges can learn their forwarding table based on the source MAC address of the incoming packets.

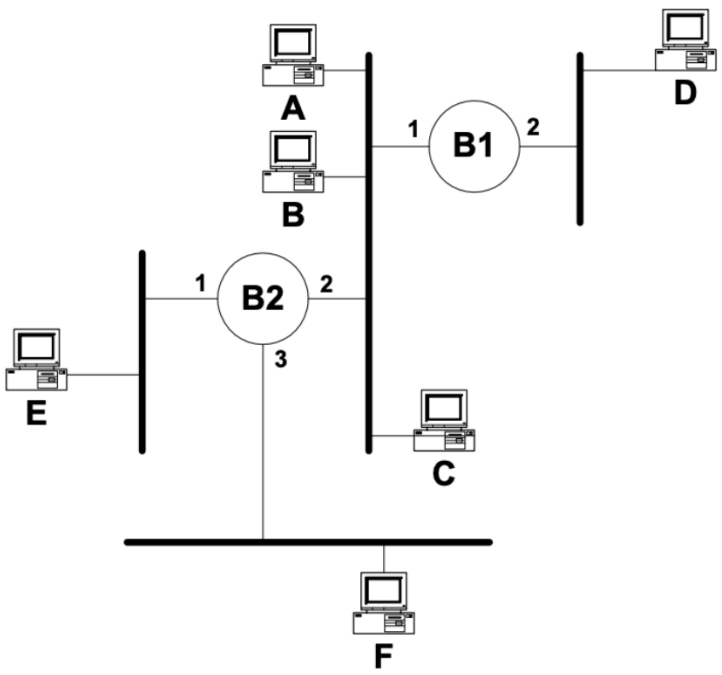


Assuming each initially knows nothing, and two transmissions occur in order -

a. $\mathrm{B}$ sends to $\mathrm{C}$
b. $\mathrm{D}$ sends to $\mathrm{B}$

Now suppose if $\mathrm{F}$ sends to $\mathrm{D}$, then which of the following nodes will receive the packet other than $\mathrm{D}$?

A. $\mathrm{A}$
B. $\mathrm{B}$
C. $\mathrm{C}$
D. $\mathrm{E}$

Your Answer: | Correct Answer: A;B;C | Not Attempted | Time taken: 00min 00sec | Discuss

Q #6 | Multiple Choice Type | Award: 2 | Penalty: 0.67 | Computer Networks

An upper-layer packet is split into $10$ frames, each of which has an $80$ percent chance of arriving undamaged. If no error control is done by the data link protocol, how many times must the message be sent on average to get the entire thing through?

A. $7.4$
B. $9.3$
C. $6.7$
D. $2.4$

Your Answer: | Correct Answer: B | Not Attempted | Time taken: 00min 00sec | Discuss

Q #7 | Multiple Select Type | Award: 2 | Penalty: 0 | Computer Networks

Suppose a router has built up the routing table shown below. The router can deliver packets directly over interfaces $0$ and $1$, or it can forward packets to routers $\mathrm{R2}, \mathrm{R3}$, or $\mathrm{R4}$.

| SubnetNumber | SubnetMask | NextHop |
|---|---|---|
| 128.96.39.0 | 255.255.255.128 | Interface 0 |
| 128.96.39.128 | 255.255.255.128 | Interface 1 |
| 128.96.40.0 | 255.255.255.128 | R2 |
| 192.4.153.0 | 255.255.255.192 | R3 |
| $\langle$default$\rangle$ | | R4 |

Which the following statements is/are true:

A. For a packet addressed to the destination $128.96.39.10$, router uses $R4$ as the next hop.
B. For a packet addressed to the destination $128.96.40.12$, router uses $R2$ as the next hop.
C. For a packet addressed to the destination $192.4.153.17$, router uses $R3$ as the next hop.
D. For a packet addressed to the destination $192.4.153.90$, router uses $R4$ as the next hop.

Your Answer: | Correct Answer: B;C;D | Not Attempted | Time taken: 00min 00sec | Discuss

Q #8 | Multiple Choice Type | Award: 2 | Penalty: 0.67 | Computer Networks

The routing table below uses the longest prefix match in its routing decisions.

| Network Address/Length | Next Hop |
|---|---|
| 196.94.8.0/21 | S |
| 196.94.16.0/24 | T |
| 196.94.0.0/16 | U |

What are the next hops for each of the following two destination addresses?

| | Next Hop to 196.94.10.7 | Next Hop to 196.94.34.9 |
|---|---|---|
| (A) | S | T |
| (B) | S | U |
| (C) | T | T |
| (D) | T | U |

Your Answer: | Correct Answer: B | Not Attempted | Time taken: 00min 00sec | Discuss

Q #9 | Numerical Type | Award: 2 | Penalty: 0 | Computer Networks

The valid host range that has the IP address $172.29.217.11/22$ a part of, is $172.29.X.Y$ to $172.29.Z.P$. Then $X + Y + Z + P$ is ?

Your Answer: | Correct Answer: 690 | Not Attempted | Time taken: 00min 00sec | Discuss

Q #10 | Multiple Choice Type | Award: 2 | Penalty: 0.67 | Computer Networks

A router has the following CIDR entries in its forwarding table:

| Address/mask | Next hop |
|---|---|
| 135.46.56.0/22 | Interface A |
| 135.46.60.0/22 | Interface B |
| 135.46.40.0/23 | Interface C |
| Default | Interface D |

If a packet with the IP address $135.46.63.10$ arrives, where does the router forward it?

A. A
B. B
C. C
D. D

Your Answer: | Correct Answer: B | Not Attempted | Time taken: 00min 00sec | Discuss

**Q #11** Multiple Choice Type | Award: 2 | Penalty: 0.67 | Computer Networks

In a CSMA/CD network with a data rate of $10$ Mbps, the maximum distance between any station pair is found to be $2500$ m for the correct operation of the collision detection process. What should be the maximum distance if we increase the date rate to $100$ Mbps?

A. $25$ m
B. $2500$ m
C. $250$ m
D. $25$ km

Your Answer: | Correct Answer: C | Not Attempted | Time taken: 00min 00sec | Discuss

**Q #12** Multiple Choice Type | Award: 2 | Penalty: 0.67 | Computer Networks

We have used even parity to construct a hamming code of $7$ bits using $4$ data bits and $3$ parity bits. Receiver receives $1011011$ codeword. If the channel can have utmost one bit of error then which of the following is true ?

A. Recieved codeword is correct
B. Recieved codeword is incorrect, and third bit from left end has been flipped during transmission
C. Recieved codeword is incorrect, and third bit from right end has been flipped during transmission
D. Recieved codeword is incorrect, and first bit from left end has been flipped during transmission

Your Answer: | Correct Answer: B | Not Attempted | Time taken: 00min 00sec | Discuss

**Q #13** Multiple Select Type | Award: 2 | Penalty: 0 | Computer Networks

A sliding window protocol needs a sufficiently large window to avoid "stop and wait". We have decided that a window size of $200$ is needed for a given communication link. Determine the (minimum) number of bits in sequence numbers with go-back-$n$ and selective repeat protocol.

A. $8$ for Go Back N Protocol
B. $8$ for Selective Repeat Protocol
C. $9$ for Go Back N Protocol
D. $9$ for Selective Repeat Protocol

Your Answer: | Correct Answer: A;D | Not Attempted | Time taken: 00min 00sec | Discuss

**Q #14** Multiple Choice Type | Award: 2 | Penalty: 0.67 | Computer Networks

Consider a sliding–window transfer mechanism where both the sender and receiver use a window of size $3$.
The retransmission timeout (RTO) is $2 \times \mathrm{RTT}$. Packets numbered $1$ through $6$ are to be sent.
Packets $3$ and $6$ are lost during their first transmission.

Each correctly received packet generates cumulative ACK.
Assume fast retransmission is implemented such that retransmission takes place either upon receipt of the first duplicate ACK or upon timeout.

Determine how many $\mathrm{RTT}$s from the start elapse before packet $6$ is transmitted again.

A. $3$

B. $5$
C. $6$
D. $8$

Your Answer: | Correct Answer: B | Not Attempted | Time taken: 00min 00sec | Discuss

Q #15 | Multiple Choice Type | Award: 2 | Penalty: 0.67 | Computer Networks

Let $\mathrm{A}$ and $\mathrm{B}$ be two stations attempting to transmit on an Ethernet. $\mathrm{A}$'s frames will be numbered $\mathrm{A1}$, $\mathrm{A2}$, and so on, and $\mathrm{B}$'s similarly.
Suppose $\mathrm{A}$ and $\mathrm{B}$ simultaneously attempt to send frame $1$. Consider the following events.

- $\mathrm{A1}$ collides with $\mathrm{B1}$, $\mathrm{A}$ wins backoff race immediately after the first collision of $\mathrm{A1}$.
- $\mathrm{A2}$ collides with $\mathrm{B1}$, $\mathrm{A}$ wins backoff race immediately after the first collision of $\mathrm{A2}$.
- $\mathrm{A3}$ collides with $\mathrm{B1}$.

What is the probability that $\mathrm{A}$ wins this third backoff race immediately after the first collision of $\mathrm{A3}$?

A. $5/8$
B. $13/16$
C. $6/16$
D. $3/4$

Your Answer: | Correct Answer: B | Not Attempted | Time taken: 00min 00sec | Discuss

Copyright & Stuff